SOMFY®

LT 50 CSI TECHNICAL DATA

DMKI - FPTE
RANGE 1
LT50CSIRange1R1

Nominal voltage	230 V - 50 Hz
Power supply tolerances	207 - 244V
Thermal time	4 minutes
Number of wires of the cable	4
Wire section	0,75 mm2
Type of limit switch unit	Quick limit switch
Capacity of the LSU	34 turns
Repeatability	± 5°
System of protection	IP 44
Interface drawings	Wheel interface LT50 206821-Crown interface LT50 206822-CSI head interface drawing 206831 (no contactual)-CSI head interface drawing 206832 (contactual)-Interface drawing CSI buttons 206844.
Basic crown for tube Ø	50 x 1,5 mm
CSI gear ratio	1/27
Crank operation effort	10% of the motor's nominal torque
Temperature working range	Normal use : -10°C to +40°C Exceptionnal use (20% of the life time not continuous) : -25°C to + 70°C
Noise level	According to SOMFY measures (for information only).Worse value : in load up direction during 10 seconds.

	Nm	rpm		mm	mm	mm	mm	W	A	°C		kg	dBA
Designation	**Nominal torque**	**Nominal speed**	**reference**	**L1 max.**	**L2 (±3 mm)**	**L3 max.**	**tube**	**Rated power**	**Rated current**	**Thermal tripping**	**Brake type**	**Weight**	**Noise**
Ceres CSI	**8**	**12**	200904	544	529	557	490	90	0,4	140	sliding	2,34	46
	8	**17**	200905	544	529	557	490	90	0,45	140	sliding	2,64	47
Jet CSI	**10**	**17**	200907	544	529	557	490	120	0,5	140	sliding	2,44	47
Atlas CSI	**15**	**12**	200909	544	529	557	490	120	0,5	140	sliding	2,44	48
Meteor CSI	**20**	**12**	200912	594	579	607	540	140	0,65	150	sliding	2,61	48
	20	**17**	200913	594	579	607	540	160	0,75	150	sliding	2,76	53
Gemini CSI	**25**	**17**	200914	594	579	607	540	170	0,8	150	sliding	2,81	56
Helios CSI	**30**	**12**	200915	594	579	607	540	160	0,75	150	sliding	2,75	55
	30	**17**	200916	594	579	607	540	240	1,1	150	sliding	3,09	55
Apollo CSI	**35**	**17**	200918	594	579	607	540	240	1,1	150	sliding	3,09	56
Mariner CSI	**40**	**12**	200919	594	579	607	540	240	1,1	150	sliding	3,09	55
	40	**17**	200920	664	649	677	610	270	1,2	140	coil brake	3,38	57
Vectran CSI	**45**	**12**	200921	594	579	607	540	240	1,1	150	sliding	3,09	57
	50	**12**	200922	594	579	607	540	240	1,1	150	sliding	3,09	57

SOMFY®

LT 50 CSI TECHNICAL DATA

RANGE 1

WIRING		
	Neutral	Blue
	White button	Brown
	Yellow button	Black
	Earth	Green / Yellow

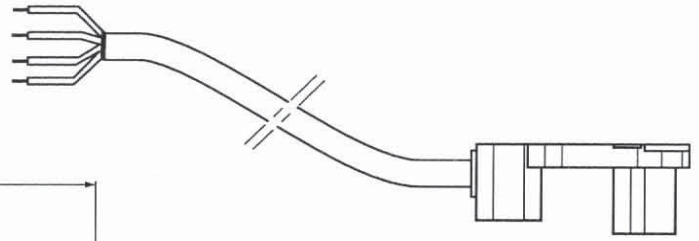

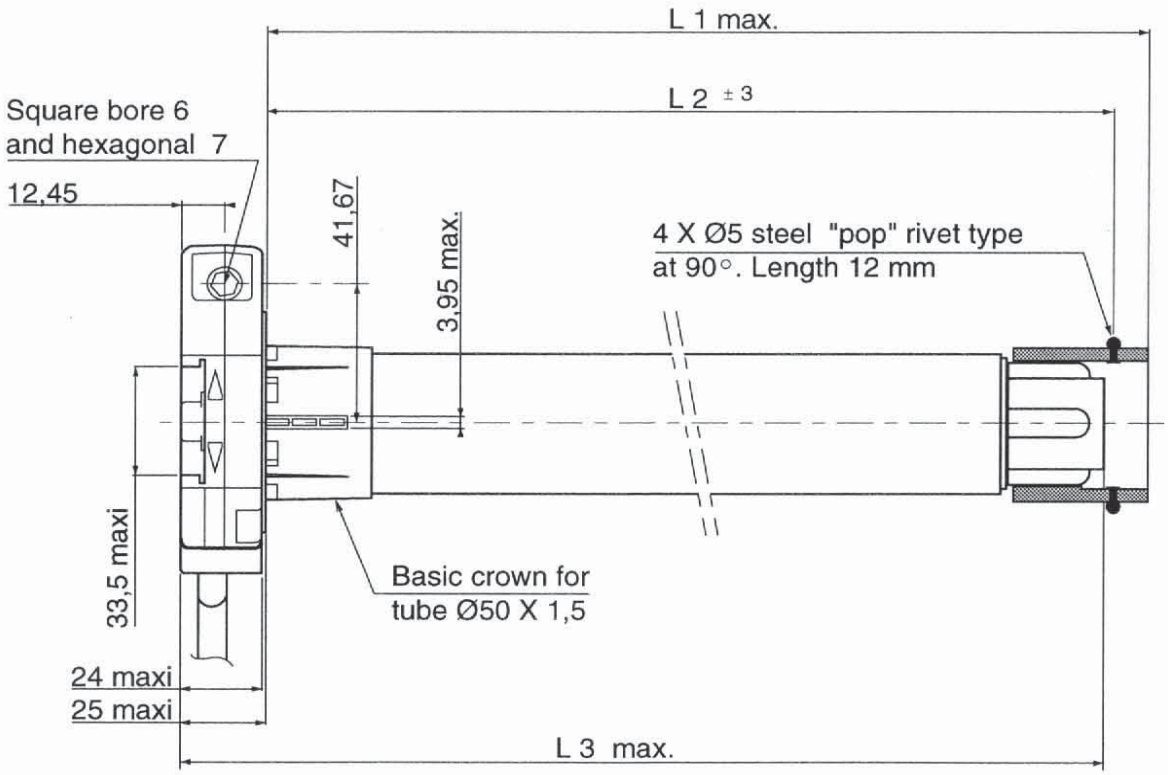

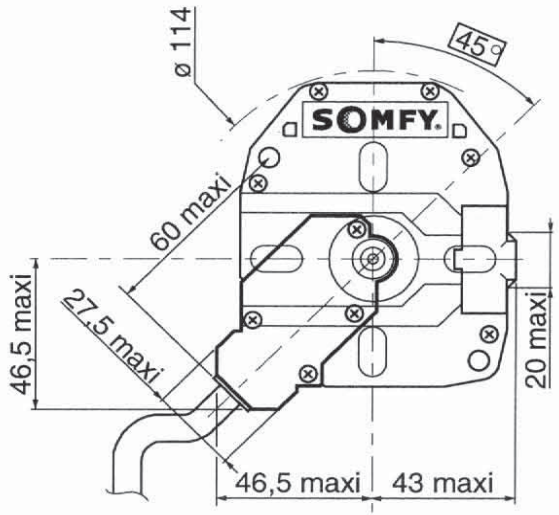

Visa :	BEM	Quality	MKI